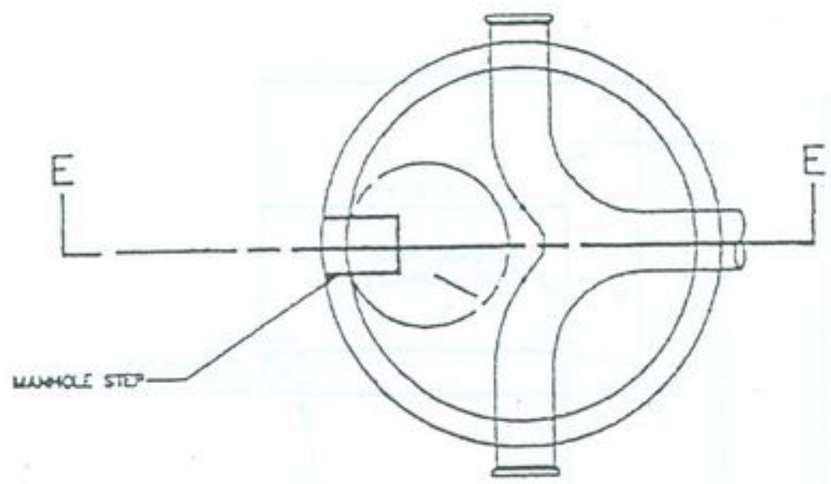

PLAN BELOW LINE A–A

1. THE DEPTH OF THE INVERT CHANNEL SHALL BE EQUAL TO 3/4 OF THE DIAMETER OF THE SEWER.

2. THE SHELF SHALL SLOPE TOWARD THE INVERT CHANNEL AT A RATE OF 1" PER FOOT.

3. FOR MANHOLES HAVING 5' DIA. AND 6' DIA. BASE REDUCTION IN DIAMETER TO 4' SHALL START AT THE FIRST JOINT ABOVE THE UPPERMOST PIPE CONNECTION TO WALL WHERE DEPTH IS SUFFICIENT.

4. ALL MANHOLE FRAMES SHALL BE BOLTED TO THE CONE SECTION OR CONCRETE SLAB WITH 2–3/4" DIA. BOLTS WITH WASHERS AND NUTS WHEN REQ'D BY ENGINEER.

   WATERTIGHT COVERS SHALL HAVE 4–3/4" BOLTS AT 90° ON THE BOLT CIRCLE. ALL BOLTS, NUTS & WASHERS SHALL BE GALVANIZED.

5. ALL CONCRETE SHALL BE CLASS A 4000 P.S.I. MIN. @ 28 DAYS.

6. ENTIRE OUTSIDE SURFACE OF MANHOLE SHALL RECEIVE THREE COATS OF BITUMINOUS COATING, KOPPERS 300M, OR EQUAL, MIN. 32 MIL THICK.

7. INSTALL PLASTIC PRE-FORMED JOINT SEALANT BETWEEN ALL SECTIONS AND UNDER FRAME.

8. MANHOLE CONSTRUCTION SHALL BE IN ACCORDANCE WITH ASTM C478. (SEE FIGURE 4)

9. STEPS TO BE ALUMINUM ALLOY WITH DEPRESSED TREAD, OR REINFORCED PLASTIC.

10. A–LOK GASKETS PER ASTM C443 WITH 10° OMNIDIRECTIONAL DEFLECTION.

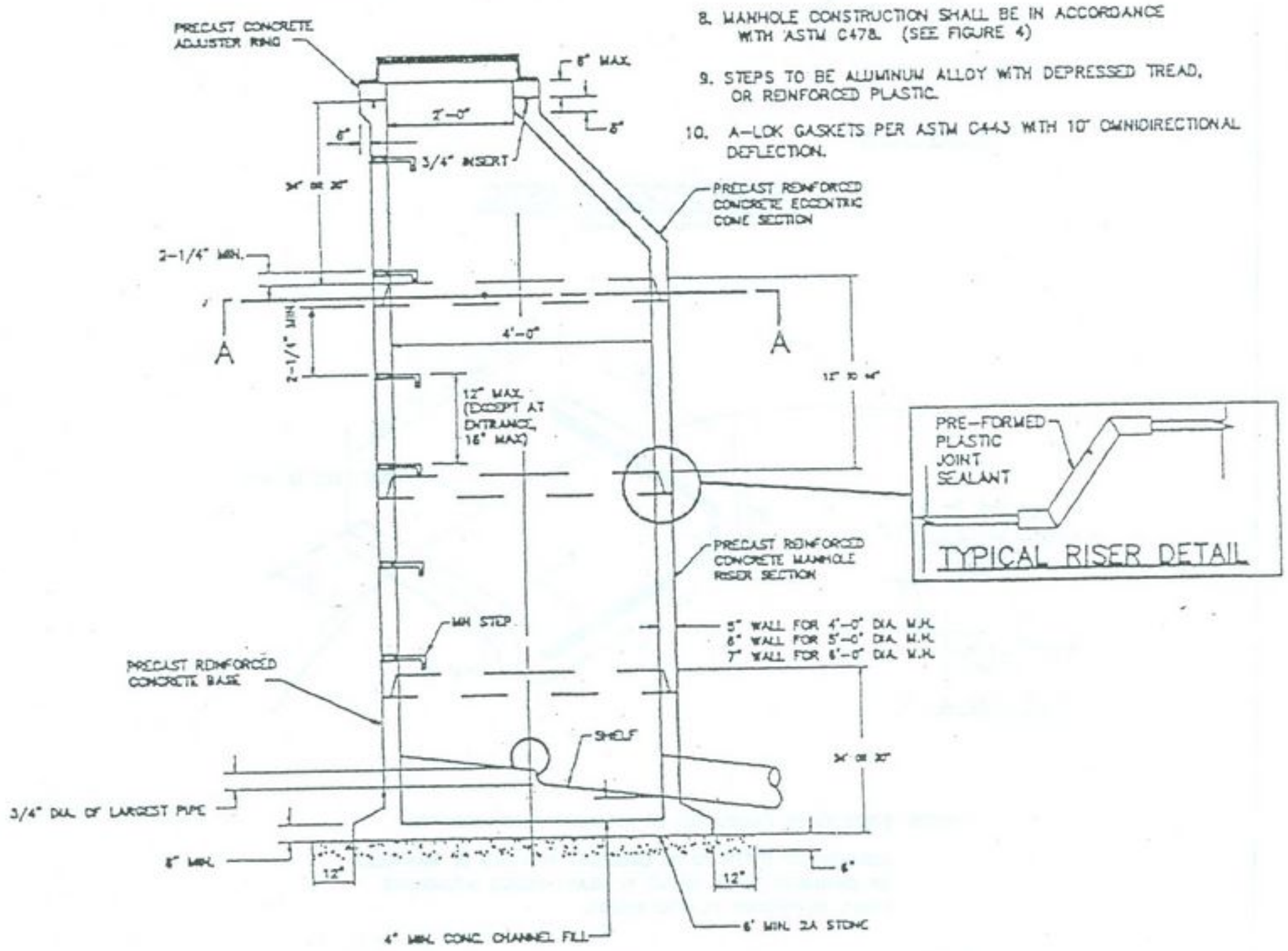

TYPICAL STANDARD MANHOLE

Not To Scale

FIGURE 3